DATA SHEET

7216 B - metal box with cover and protective terminal

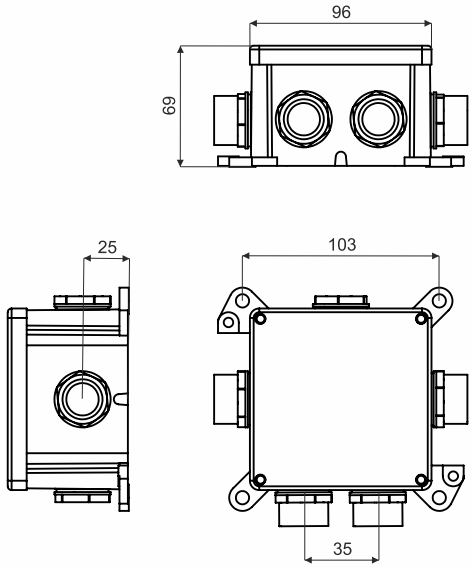

product description:

designed for distribution system with voltage 500 V and with maximum current 16 A
boxes for piping with steel threaded or metal flexible pipes
four glands and one plug evenly distributed on the sides of the box
fitted with a clamp for installation in TNS networks
to install on materials with fire classes E or F, use thermally insulating pad
dimension: 96x96x64 mm

material: aluminum

temperature resistance: -25 - +70 °C

fire class for underlying material: A1-D

protection types: IP 54

weight: 575 g

mechanical protection according to EN 50102: IK10

meets the requirements: ČSN EN 60670-1, ČSN EN IEC 60670-1 ed. 2:21

storage: EN 60721-3-1

7216 B_P16 - glands for threaded pipes P16; 12 pcs boxes in carton

7216 B_M20 - glands for threaded pipes M20; 12 pcs boxes in carton

accessories:

screwless terminal plates TYP015, TYP016, TYP017, TYP018
sealing cork P-16

recycling symbols:

41 ALU box

40 FE clamp, screws

21 PAP cardboard

42-49 OTHER METALS screws

WARNING

risks associated with using the products:

incorrect electrical installation can cause a fire - we recommend the connection to be carried out exclusively by an authorized person

follow the manufacturer's installation instructions according to the installation instructions and videos

damage to the product - if the box is visibly damaged, stop using it

under normal and foreseeable conditions of use, the installed box does not pose any risks to consumers